armacon

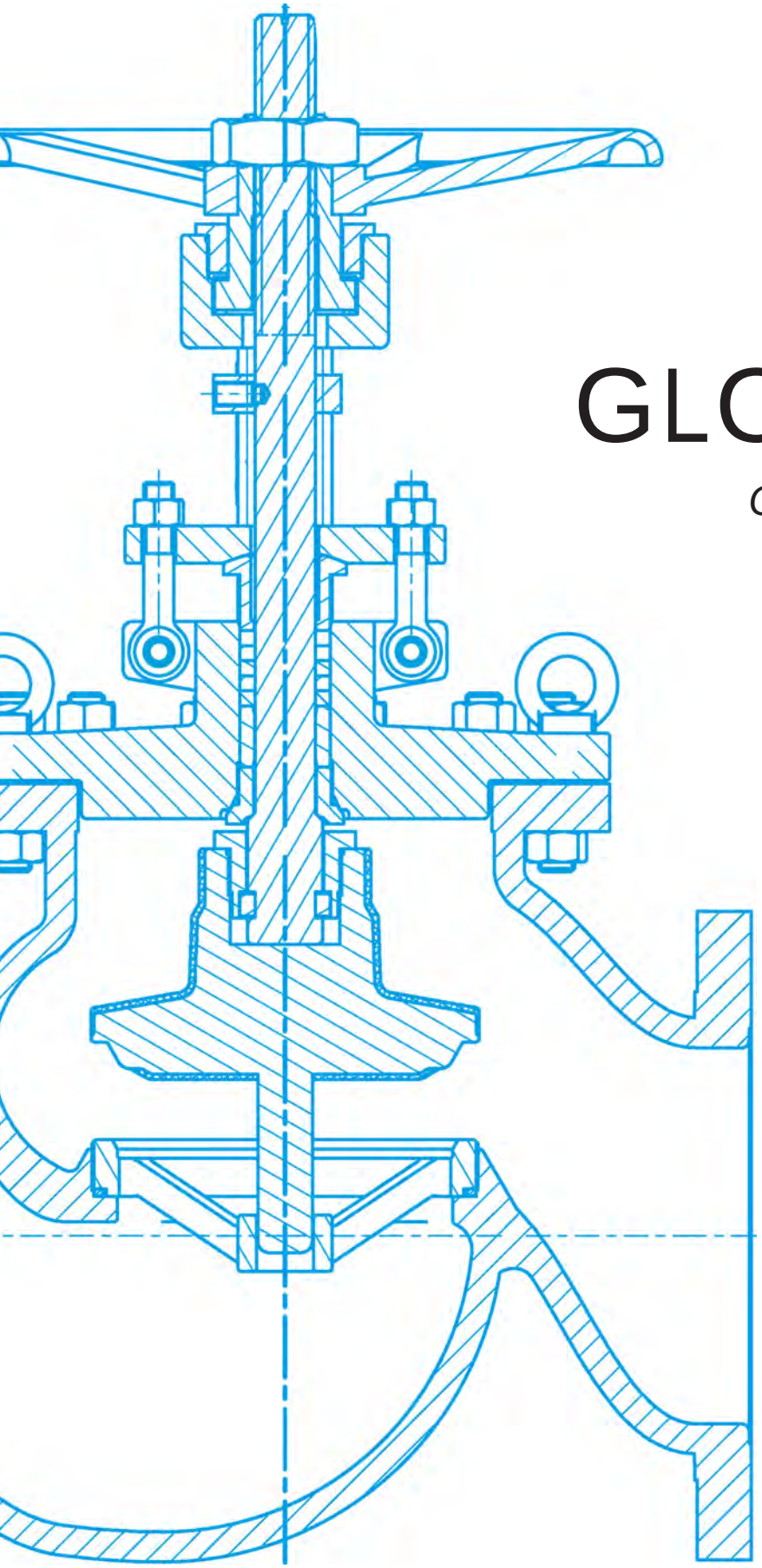

GLOBE VALVE

CLASS 150 - 300 / 125 - 250

SIZE 1 inch - 16 inch

9COM 6000000302 | Vendor ID 10044415 | Plant ID 0005742

About

Armacon

located in Magdeburg, Germany, Armacon looks back on more than 160 years of tradition. It offers technically ambitious, patented valves and complete solutions. Customers and partners benefit equally from the many years of experience in dealing with valve norms and standards of manufacturing and rely on the engineering knowledge of a specialized team.

GLOBE VALVE
CLASS 150-300

Produktübersicht | *Product overview*

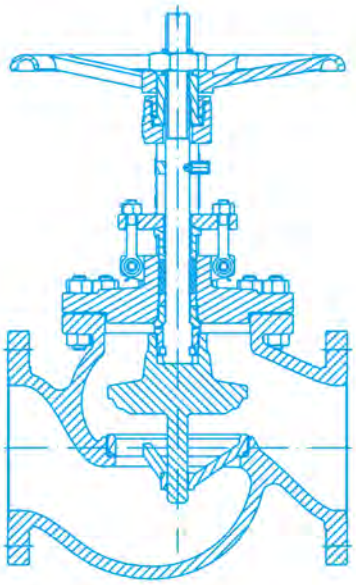

Absperrventil mit Handrad
Globe valve with handwheel

1 - 10 Zoll

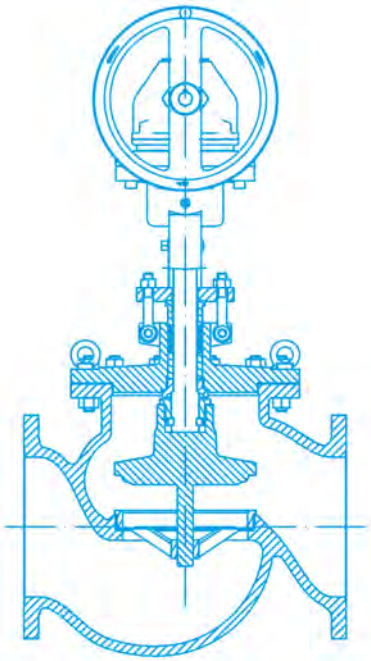

Absperrventil mit Getriebe
Gearbox with handwheel

10 - 16 Zoll

Kegelvarianten | *Plug overview*

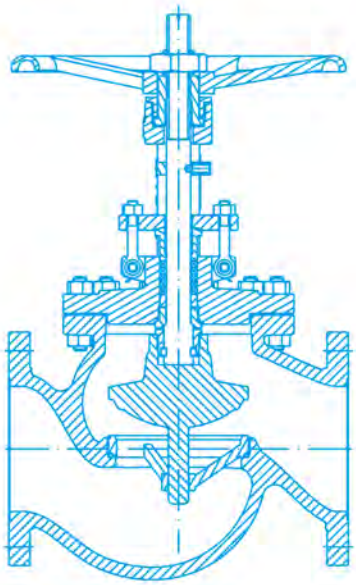

Kegel gummiert
rubberlined plug

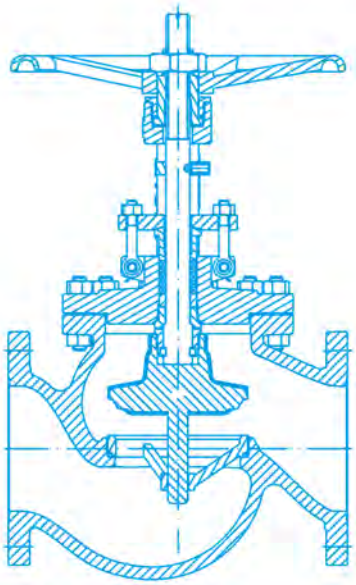

Parabolkegel
parabolic plug

armacon GmbH - Liebknechtstr. 79 - 39110 Magdeburg - Germany - T +49 391 7322111 -
sales@armacon.de - t.wenig@armacon.de - www.armacon.de

Absperrventil Class 150 N8“ vor der Beschichtung

Globe valve class 150 N8“ before coating

armacon GmbH - Liebknechtstr. 79 - 39110 Magdeburg - Germany - T +49 391 7322111 -
sales@armacon.de - t.wenig@armacon.de - www.armacon.de

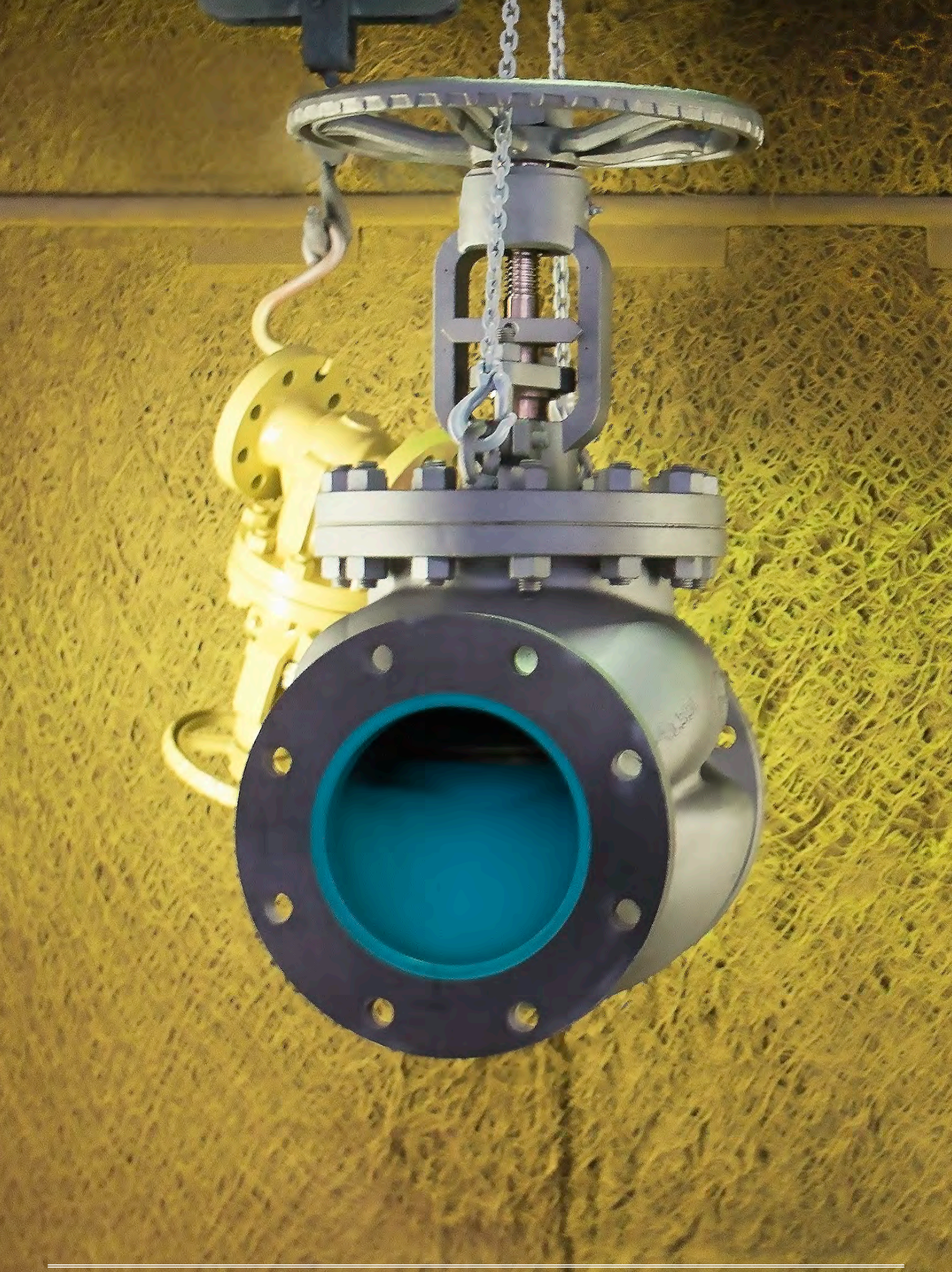

armacon GmbH - Liebknechtstr. 79 - 39110 Magdeburg - Germany - T +49 391 7322111 -
sales@armacon.de - t.wenig@armacon.de - www.armacon.de

Unsere Armaturen werden in der eigenen Farbgebung kunden- und normspezifisch beschichtet und überprüft.

Our valves are customer- and standard specific coated and tested in our own color workshop.

armacon GmbH - Liebknechtstr. 79 - 39110 Magdeburg - Germany - T +49 391 7322111 -
sales@armacon.de - t.wenig@armacon.de - www.armacon.de

GLOBE VALVE
CLASS 150-300

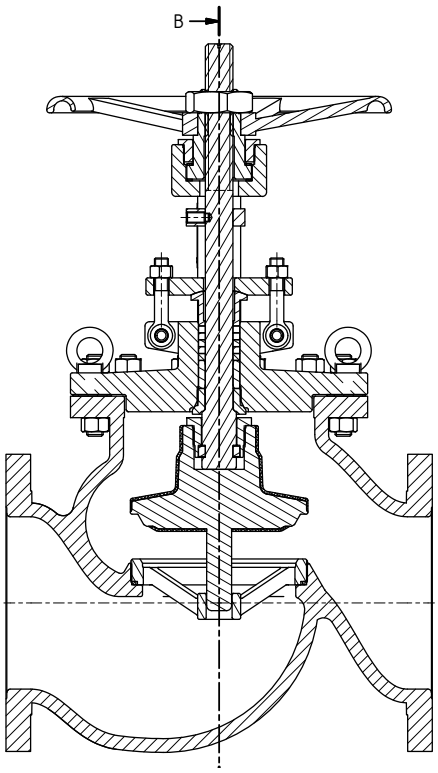

Globe Valve Front

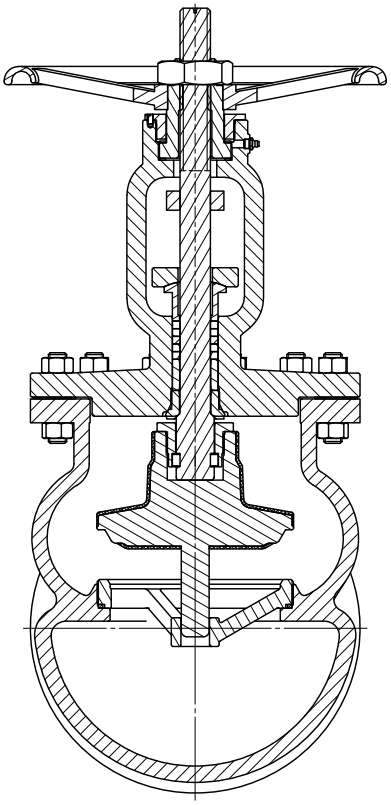

Globe Valve Side

Produktdaten
Product data

Typ VD11
Druckstufe Class 150 - 300 I 125 - 250
Nennweite 1inch - 16inches
Baulänge ASME B16.10
Flanschanschluss ASME B16.1,
ASME B16.5, ASME B16.42
Temperaturbereich -29°C to 343°C

Type VD11
Pressure rate class 150 - 300
Nominal size1inch – 16inches
Face-to-Face ASME B16.10
Flange connection ASME B16.1,
ASME B16.5, ASME B16.42
temperature range -20°F to 650°F

Produktmerkmale
Product features

Konstruktionsstandard MSS SP-85
Durchgangsgehäuse
Strömungsoptimierte Gehäuseform
Kleiner Druckverlust
Keine Kavitation
Kegel und Sitz austauschbar

Design standard MSS SP-85
Straight pattern
Flow optimized body shape
Low pressure loss
No cavitiation
Renewable plug and seat

armacon GmbH - Liebknechtstr. 79 - 39110 Magdeburg - Germany - T +49 391 7322111 -
sales@armacon.de - t.wenig@armacon.de - www.armacon.de

GLOBE VALVE
CLASS 150-300

Globe Valve 3D Model

Konstruktionsmerkmale

Anströmrichtung
unter Kegel (standard)
über Kegel

Kegelvarianten
Kegel
Drehbar gelagerter Kegel
Parabolkegel
Kegel mit Führung

Design Features

Flow direction
below valve plug (standard)
above valve plug

plug variants
disc plug
swivel plug disc
parabolic plug
Guided plug

armacon GmbH - Liebknechtstr. 79 - 39110 Magdeburg - Germany - T +49 391 7322111 -
sales@armacon.de - t.wenig@armacon.de - www.armacon.de

Jede Armatur wird von uns kunden- und normspezifisch konstruiert und gefertigt.

Each valve is designed and manufactured by us according to customer and standards.

armacon GmbH - Liebknechtstr. 79 - 39110 Magdeburg - Germany - T +49 391 7322111 -
sales@armacon.de - t.wenig@armacon.de - www.armacon.de

GLOBE VALVE
CLASS 150-300

Maße
Dimensions

Class 150

NPS	DN	L	D	k x n	d1 (in.)	H open	Dk	weight (kg)
1“	25	127	110	79,4 x 4	5/8	310	125	17
2“	50	178	150	120,7 x 4	3/4	360	200	26
3“	80	203	190	152,4 x 4	3/4	450	250	45
4“	100	229	230	190,5 x 8	3/4	480	250	58
6“	150	394	280	241,3 x 8	7/8	530	400	96
8“	200	457	345	298,5 x 8	7/8	655	400	170
10“	250	533	405	362 x 12	1	1030	400	355
12“	300	610	485	431,8 x 12	1	1130	400	495
14“	350	686	535	476,3 x 12	11/8	1500	500	843
16“	400	762	595	539,8 x 16	11/8	1600	630	1241

Class 300

NPS	DN	L	D	k x n	d1 (in.)	H open	Dk	weight (kg)
1“	25	203	125	88,9 x 4	3/4	330	125	22
2“	50	216	165	127,0 x 8	3/4	390	200	34
3“	80	283	210	168,3 x 8	7/8	490	250	60
4“	100	305	255	200,0 x 8	7/8	520	400	75
6“	150	457	320	269,9 x 12	7/8	580	500	125
8“	200	502	380	330,2 x 12	1	700	500	220
10“	250	568	445	387,4 x 16	11/8	1130	500	460
12“	300	648	520	450,8 x 16	11/4	1230	500	640
14“	350	762	585	514,4 x 20	11/4	1630	630	1100
16“	400	838	650	571,5 x 20	13/8	1730	630	1615

Alle Abmessungen in mm, Abmessungen nach anderen Standards auf Anfrage

All dimensions in mm, dimensions according other standards on request

GLOBE VALVE
CLASS 150-300

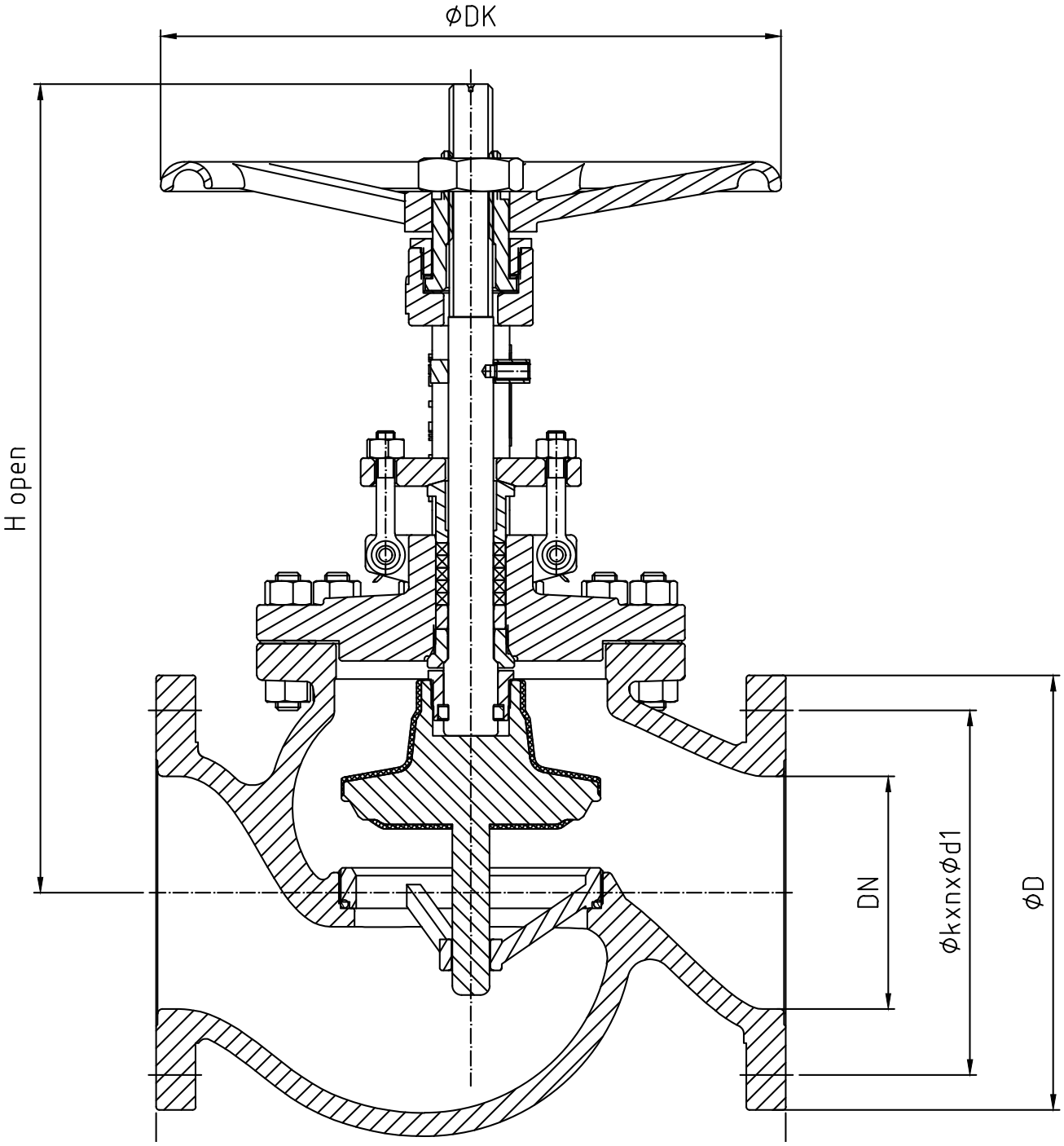

Technische Zeichung

Technical Drawing

armacon GmbH - Liebknechtstr. 79 - 39110 Magdeburg - Germany - T +49 391 7322111 -
sales@armacon.de - t.wenig@armacon.de - www.armacon.de

GLOBE VALVE
CLASS 150-300

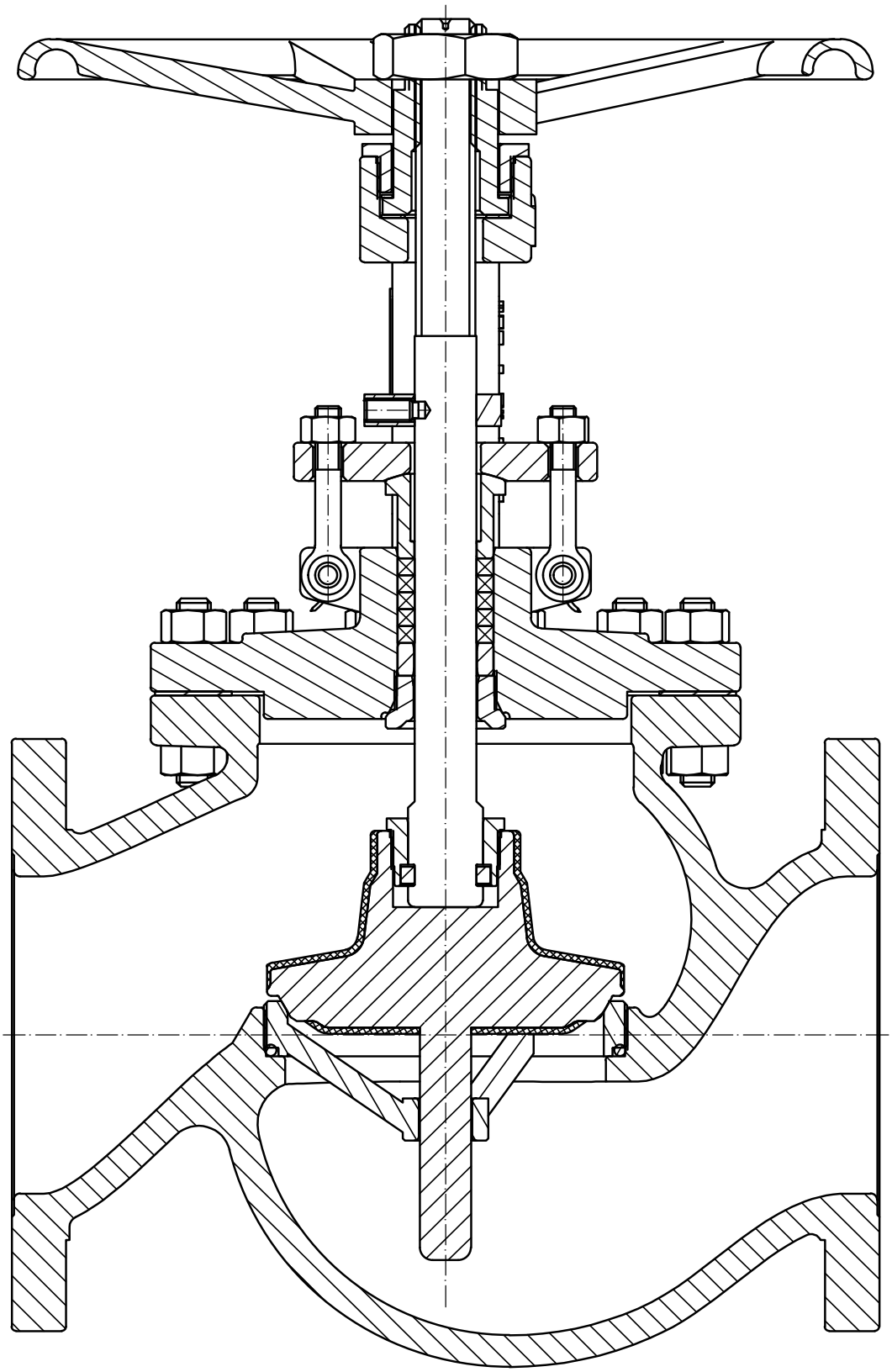

armacon GmbH - Liebknechtstr. 79 - 39110 Magdeburg - Germany - T +49 391 7322111 -
sales@armacon.de - t.wenig@armacon.de - www.armacon.de

GLOBE VALVE
CLASS 150-300

armacon GmbH - Liebknechtstr. 79 - 39110 Magdeburg - Germany - T +49 391 7322111 -
sales@armacon.de - t.wenig@armacon.de - www.armacon.de

Rhei Principle

Rhei Valve

Compared to conventional valves the Rhei Valve has an outstanding aerodynamical efficient casting shape. The Diameterform through the body effects a constant and closed flow from the entrance to the exit of the pipe. With this kind of flow form the pressure loss is 50% less in 30m – 50m meter long pipes compared to other valves.
Based on the aerodynamically efficient shape of the body the cavitation of the rhei valve is avoided compared to conventional shut-off valves at the same pressure and volume flow entry parameters.

The Rhei valve is one of the most important innovations in the development of valves.

GLOBE VALVE
CLASS 150-300

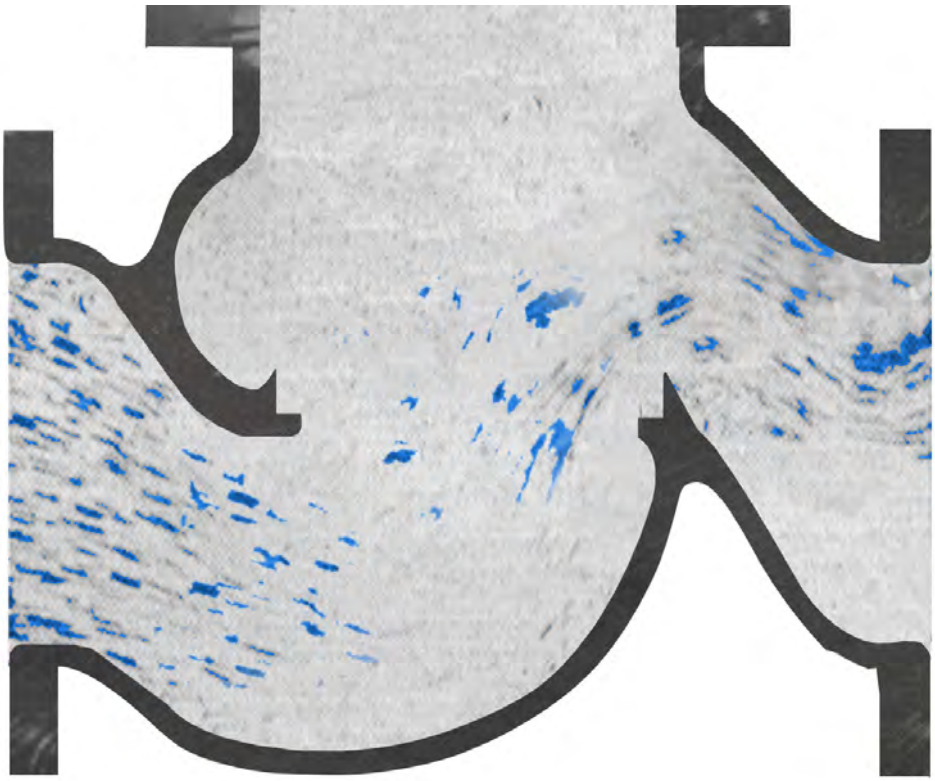

armacon GmbH - Liebknechtstr. 79 - 39110 Magdeburg - Germany - T +49 391 7322111 -
sales@armacon.de - t.wenig@armacon.de - www.armacon.de

GLOBE VALVE
CLASS 150 - 300

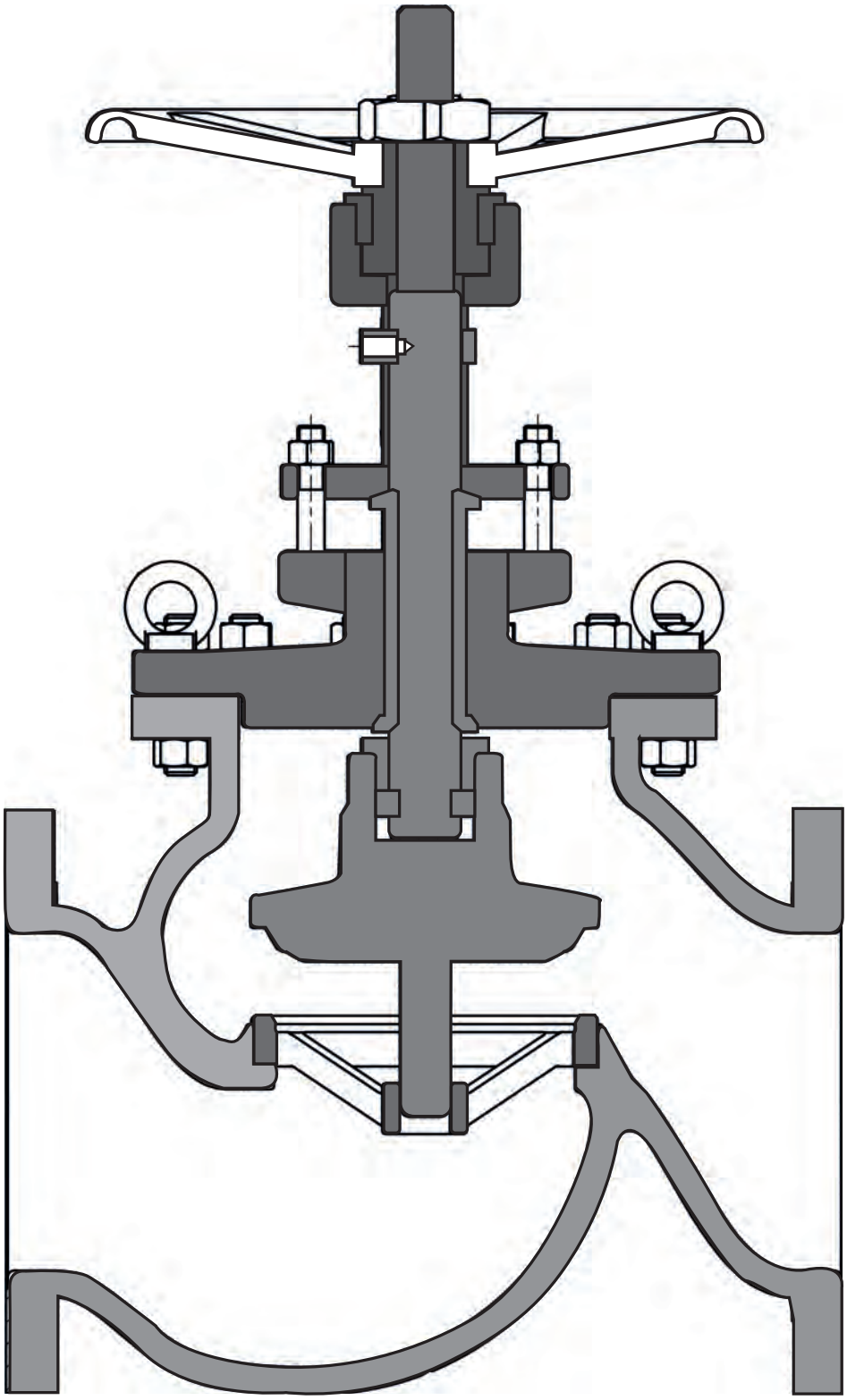

Querschnitt Globe Valve
Profile Globe Valve

armacon GmbH - Liebknechtstr. 79 - 39110 Magdeburg - Germany - T +49 391 7322111 -
sales@armacon.de - t.wenig@armacon.de - www.armacon.de

GLOBE VALVE
CLASS 150-300

Material *Material*

Duktiles Gusseisen *ductile iron*

Item	Beschreibung - *Description*	Material
1	Gehäuse - Body	ASTM A395 Gr.60-40-18
1.1	Sitzring - seat ring	Cast Bronze
2	Bügeldeckel - cover	ASTM A395 Gr.60-40-18
3	Spindel - Stem	ASTM B150 C63000
4	Kegel - Plug	Cast Bronze
5	Stoffbuchspackung - stuffing box packing	Braided graphite
6	Gehäusedichtung - gasket	synthetic fiber
7	Handrad - handwheel	ductile iron
8	Schrauben und Muttern - bolts and nuts	ASTM A193 B7/A194 2H
9	Führungsbuchse - guiding bushing	Bronze
10	Stoffbuchsunterteil - stuffing box	Bronze
18	Bundbuchse - threaded bushing	Bronze
20	Rückdichtung - backseat bushing	Bronze

Grauguss *grey iron*

Item	Beschreibung - *Description*	Material
1	Gehäuse - Body	ASTM A126 class B
1.1	Sitzring - seat ring	Cast Bronze
2	Bügeldeckel - cover	ASTM A126 class B
3	Spindel - Stem	ASTM B150 C63000
4	Kegel - Plug	Cast Bronze
5	Stoffbuchspackung - stuffing box packing	Braided graphite
6	Gehäusedichtung - gasket	synthetic fiber
7	Handrad - handwheel	ductile iron
8	Schrauben und Muttern - bolts and nuts	ASTM A193 B7/A194 2H
9	Führungsbuchse - guiding bushing	Bronze
10	Stoffbuchsunterteil - stuffing box	Bronze
18	Bundbuchse - threaded bushing	Bronze
20	Rückdichtung - backseat bushing	Bronze

GLOBE VALVE
CLASS 150-300

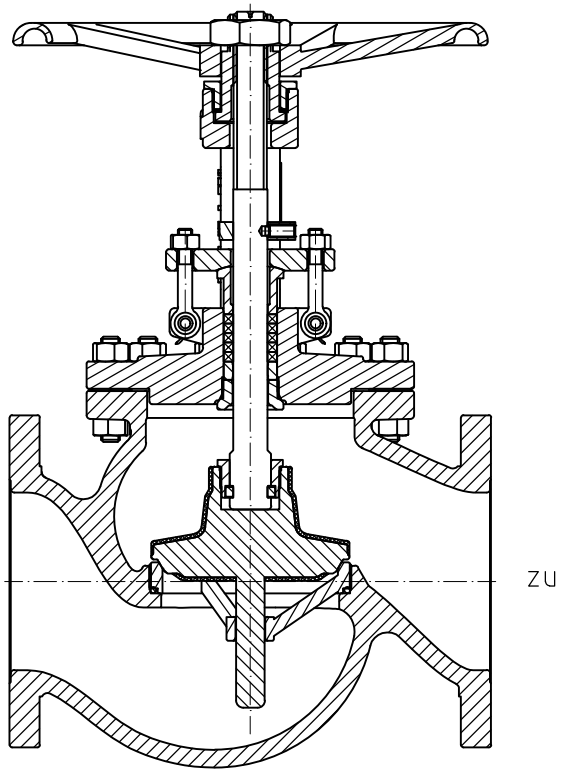

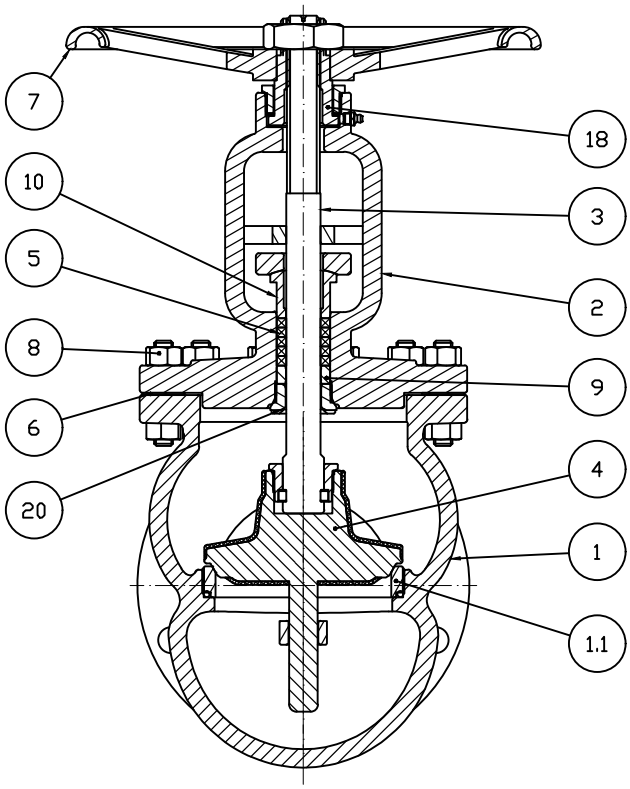

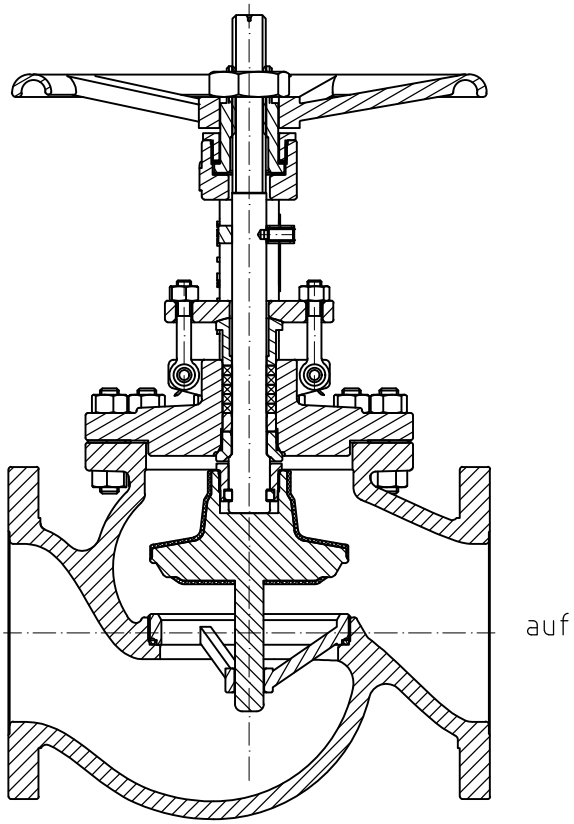

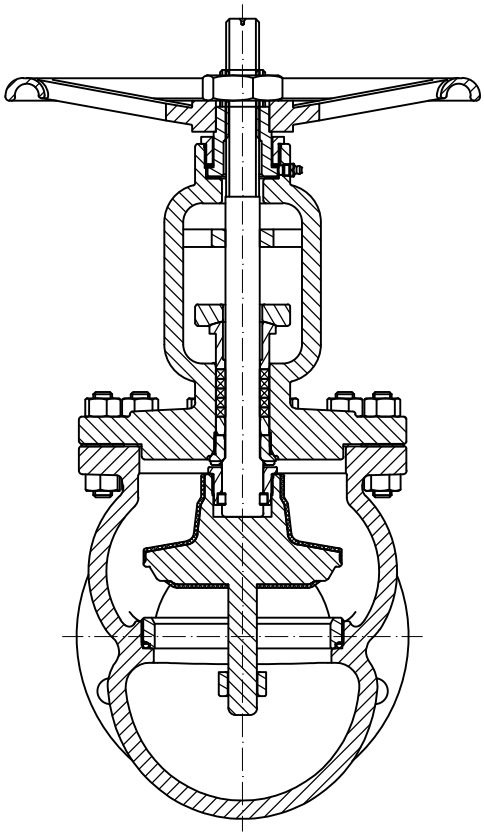

armacon GmbH - Liebknechtstr. 79 - 39110 Magdeburg - Germany - T +49 391 7322111 -
sales@armacon.de - t.wenig@armacon.de - www.armacon.de

armacon GmbH - Liebknechtstr. 79 - 39110 Magdeburg - Germany - T +49 391 7322111 -
sales@armacon.de - t.wenig@armacon.de - www.armacon.de

Basierend auf einem jahrelangen Know How und modernsten Maschinen werden alle Armaturen von uns kunden- und normspezifisch konstruiert und gefertig.

Based on a long-standing know-how and hightech machines each valve is designed and manufactured by us according to customer and standards.

armacon GmbH - Liebknechtstr. 79 - 39110 Magdeburg - Germany - T +49 391 7322111 -
sales@armacon.de - t.wenig@armacon.de - www.armacon.de

armacon GmbH - Liebknechtstr. 79 - 39110 Magdeburg - Germany - T +49 391 7822111 -
sales@armacon.de - t.wenig@armacon.de - www.armacon.de

Jede Armatur wird in unserem eigenen Prüfstand sorgfäligt überprüft.

Every valve is carefully checked in our own test stand.

armacon GmbH - Liebknechtstr. 79 - 39110 Magdeburg - Germany - T +49 391 7322111 -
sales@armacon.de - t.wenig@armacon.de - www.armacon.de

armacon GmbH - Liebknechtstr. 79 - 39110 Magdeburg - Germany - T +49 391 7322111 -
sales@armacon.de - t.wenig@armacon.de - www.armacon.de

Jede Armatur wird in unserem eigenen Prüfstand sorgfäligt überprüft.

Every valve is carefully checked in our own test stand.

armacon GmbH - Liebknechtstr. 79 - 39110 Magdeburg - Germany - T +49 391 7322111 -
sales@armacon.de - t.wenig@armacon.de - www.armacon.de

Guarantee

Guarantee

Customized service - we serve our customers comprehensively and competently. The service of Armacon assists customers from all areas – whether it be industrial, municipal facilities or power plant operators. Armacon service: Tailor-made service solutions throughout the entire life cycle. The quality and environmental management system is continuously reviewed by internal and external audits and specified. Our comprehensive system analysis increases the profitability of your systems. Customized service concepts optimize the availability of your systems. Using Armacon original spare parts avoids costly downtime. 24-Hour Service: Qualified Armacon service specialists are available quickly.

GLOBE VALVE
CLASS 150 - 300

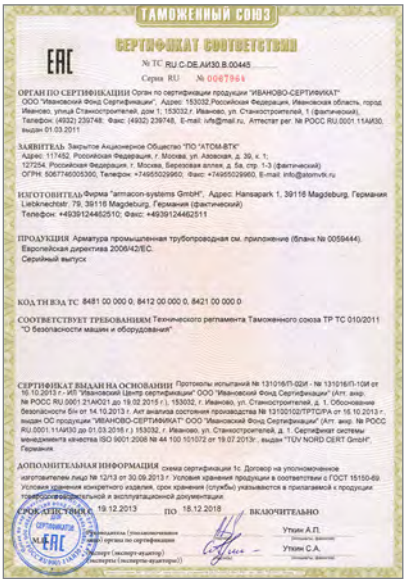

Zertifikate
Zertificates

API 6FA
DIN EN ISO 9001 - 2008
EAC 2018-12-18
DIN ISO 9001
AOC PLANT EVALUATION
API 602

GLOBE VALVE
CLASS 150-300

Technique

- Production of series of valves according to DIN, ANSI and other standards and with the relevant certificates
- Static testing of valves and pressure-retaining parts
- Determination of friction and sealing momentum
- Torque and force measurements
- Determination of the parameters of actuators
- Determination of the opening and closing behavior of valves under pressure
- Determination of flow-related parameters for predicting the operational performance of valves
- Determination of flow and resistance characteristics
- Creating control characteristics
- Determination of flow forces and momentums
- Determination cavitation characteristics
- Creation of fluid dynamic optimizations
- Sound technology investigations
- Measurement of sound pressure levels and frequency spectra
- Determining acoustic efficiency for predicting sound pressure levels

Service

- Service and repair of valves, also on-site
- Tightness and leakage measurements
- Investigations of actuators for valves
- Representation of motion over time
- Duration circuits for assessing the deterioration, the reliability and the life span

Engineering

- Development and production of customized valves according to currently valid norms and standards
- System solutions
- Creation of sound technical optimization

armacon GmbH - Liebknechtstr. 79 - 39110 Magdeburg - Germany - T +49 391 7322111 -
sales@armacon.de - t.wenig@armacon.de - www.armacon.de

armacon GmbH - Liebknechtstr. 79 - 39110 Magdeburg - Germany - T +49 391 7322111 -
sales@armacon.de - t.wenig@armacon.de - www.armacon.de

armacon GmbH

www.armacon.de

sales@armacon.de